Drainage Area A

Drainage Area A Land Cover (acres)	A soils	B Soils	C Soils	D Soils	Totals	Land Cover Rv
Forest/Open Space (acres)	0.00	0.00	0.00	5.55	5.55	0.05
Managed Turf (acres)	0.00	1.63	10.33	10.74	22.60	0.23
Impervious Cover (acres)	0.00	2.57	14.91	7.61	25.09	0.95
			Total		53.24	

Post Development Treatment Volume (cf) 106637

Apply Runoff Reduction Practices to Reduce Treatment Volume & Post-Development Load in Drainage Area A

Practice	Unit	Description of Credit	Credit	Credit Area (acres)	Volume from Upstream RR Practice (cf)	Runoff Reduction (cf)	Remaining Runoff Volume (cf)	Phosphorus Efficiency (%)	Phosphorus Load from Upstream RR Practices (lbs)	Untreated Phosphorus Load to Practice (lbs)	Phosphorus Removed By Practice (lbs)	Remaining Phosphorus Load (lbs)	Downstream Treatment to be Employed
1. Vegetated Roof													
1.a. Vegetated Roof #1 (Spec #5)	acres of green roof	45% runoff volume reduction	0.45	0.00	0	0	0	0	0.00	0.00	0.00	0.00	
1.b. Vegetated Roof #2 (Spec #5)	acres of green roof	60% runoff volume reduction	0.60	0.00	0	0	0	0	0.00	0.00	0.00	0.00	
2. Rooftop Disconnection													
2.a. Simple Disconnection to A/B Soils (Spec #1)	impervious acres disconnected	50% runoff volume reduction for treated area	0.50	0.00	0	0	0	0	0.00	0.00	0.00	0.00	
2.b. Simple Disconnection to C/D Soils (Spec #1)	impervious acres disconnected	25% runoff volume reduction for treated area	0.25	0.00	0	0	0	0	0.00	0.00	0.00	0.00	
2.c. To Soil Amended Filter Path as per specifications (existing C/D soils) (Spec #4)	impervious acres disconnected	50% runoff volume reduction for treated area	0.50	0.00	0	0	0	0	0.00	0.00	0.00	0.00	
2.d. To Dry Well or French Drain #1 (Bioretention #1) (Spec #9)	impervious acres disconnected	50% runoff volume reduction for treated area	0.50	0.00	0	0	0	25	0.00	0.00	0.00	0.00	
2.e. To Dry Well or French Drain #2 (Micro-Infiltration #2) (Spec #8)	impervious acres disconnected	90% runoff volume reduction for treated area	0.90	0.00	0	0	0	25	0.00	0.00	0.00	0.00	
2.f. To Rain Garden #1 (Micro-Bioretention #1) (Spec #9)	impervious acres disconnected	40% of volume captured	0.40	0.00	0	0	0	25	0.00	0.00	0.00	0.00	
2.g. To Rain Garden #2 (Micro-Bioretention #2) (Spec #9)	impervious acres disconnected	90% runoff volume reduction for treated area	0.90	0.00	0	0	0	50	0.00	0.00	0.00	0.00	
2.h. To Rainwater Harvesting (Spec #6)	impervious acres captured	based on tank size and design spreadsheet (See Spec #6)	0.00	0.00	0	0	0	0	0.00	0.00	0.00	0.00	
2.i. To Stormwater Planter (Urban Bioretention) (Spec #9, Appendix A)	impervious acres disconnected	40% runoff volume reduction for treated area	0.40	0.00	0	0	0	25	0.00	0.00	0.00	0.00	
3. Permeable Pavement													
3.a. Permeable Pavement #1 (Spec #7)	acres of permeable pavement = acres of "external" (upgradient) impervious pavement	45% runoff volume reduction	0.45	0.00	0	0	0	25	0.00	0.00	0.00	0.00	
3.b. Permeable Pavement #2 (Spec #7)	acres of permeable pavement	75% runoff volume reduction	0.75	0.00	0	0	0	25	0.00	0.00	0.00	0.00	
4. Grass Channel													
4.a. Grass Channel A/B Soils (Spec #3)	impervious acres draining to grass channels	20% runoff volume reduction	0.20	0.00	0	0	0	15	0.00	0.00	0.00	0.00	
	turf acres draining to grass channels	20% runoff volume reduction	0.20	0.00	0	0	0	15	0.00	0.00	0.00	0.00	
4.b. Grass Channel C/D Soils (Spec #3)	impervious acres draining to grass channels	10% runoff volume reduction	0.10	0.00	0	0	0	15	0.00	0.00	0.00	0.00	
	turf acres draining to grass channels	10% runoff volume reduction	0.10	0.00	0	0	0	15	0.00	0.00	0.00	0.00	
4.c. Grass Channel with Compost Amended Soils as per specs (see Spec #4)	impervious acres draining to grass channels	30% runoff volume reduction	0.30	0.00	0	0	0	15	0.00	0.00	0.00	0.00	
	turf acres draining to grass channels	30% runoff volume reduction	0.30	0.00	0	0	0	15	0.00	0.00	0.00	0.00	
5. Dry Swale													
5.a. Dry Swale #1 (Spec #10)	impervious acres draining to dry swale	40% runoff volume reduction	0.40	0.00	0	0	0	20	0.00	0.00	0.00	0.00	
	turf acres draining to dry swale	40% runoff volume reduction	0.40	0.00	0	0	0	20	0.00	0.00	0.00	0.00	
5.b. Dry Swale #2 (Spec #10)	impervious acres draining to dry swale	60% runoff volume reduction	0.60	0.00	0	0	0	40	0.00	0.00	0.00	0.00	
	turf acres draining to dry swale	60% runoff volume reduction	0.60	0.00	0	0	0	40	0.00	0.00	0.00	0.00	
6. Bioretention													
6.a. Bioretention #1 or Urban Bioretention (Spec #9)	impervious acres draining to bioretention	40% runoff volume reduction	0.40	0.00	0	0	0	25	0.00	0.00	0.00	0.00	
	turf acres draining to bioretention	40% runoff volume reduction	0.40	0.00	0	0	0	25	0.00	0.00	0.00	0.00	
6.b. Bioretention #2 (Spec #9)	impervious acres draining to bioretention	80% runoff volume reduction	0.80	0.00	0	0	0	50	0.00	0.00	0.00	0.00	
	turf acres draining to bioretention	80% runoff volume reduction	0.80	0.00	0	0	0	50	0.00	0.00	0.00	0.00	
7. Infiltration													
7.a. Infiltration #1 (Spec #8)	impervious acres draining to infiltration	50% runoff volume reduction	0.50	0.00	0	0	0	25	0.00	0.00	0.00	0.00	
	turf acres draining to infiltration	50% runoff volume reduction	0.50	0.00	0	0	0	25	0.00	0.00	0.00	0.00	
7.b. Infiltration #2 (Spec #8)	impervious acres draining to infiltration	90% runoff volume reduction	0.90	0.00	0	0	0	25	0.00	0.00	0.00	0.00	
	turf acres draining to infiltration	90% runoff volume reduction	0.90	0.00	0	0	0	25	0.00	0.00	0.00	0.00	
8. Extended Detention Pond													
8.a. ED #1 (Spec #15)	impervious acres draining to ED	0% runoff volume reduction	0.00	0.00	0	0	0	15	0.00	0.00	0.00	0.00	
	turf acres draining to ED	0% runoff volume reduction	0.00	0.00	0	0	0	15	0.00	0.00	0.00	0.00	
8.b. ED #2 (Spec #15)	impervious acres draining to ED	15% runoff volume reduction	0.15	0.00	0	0	0	15	0.00	0.00	0.00	0.00	
	turf acres draining to ED	15% runoff volume reduction	0.15	0.00	0	0	0	15	0.00	0.00	0.00	0.00	
9. Sheetflow to Filter/Open Space													
9.a. Sheetflow to Conservation Area with A/B Soils (Spec #2)	impervious acres draining to conserved open space	75% runoff volume reduction for treated area	0.75	0.00	0	0	0	0	0.00	0.00	0.00	0.00	
	turf acres draining to conserved open space	75% runoff volume reduction for treated area	0.75	0.00	0	0	0	0	0.00	0.00	0.00	0.00	
9.b. Sheetflow to Conservation Area with C/D Soils (Spec #2)	impervious acres draining to conserved open space	50% runoff volume reduction for treated area	0.50	0.00	0	0	0	0	0.00	0.00	0.00	0.00	
	turf acres draining to conserved open space	50% runoff reduction volume for treated area	0.50	0.00	0	0	0	0	0.00	0.00	0.00	0.00	
9.c. Sheetflow to Vegetated Filter Strip in A Soils or Compost Amended B/C/D Soils (Spec #2 & #4)	impervious acres draining to filter strip	50% runoff volume reduction for treated area	0.50	0.00	0	0	0	0	0.00	0.00	0.00	0.00	
	turf acres draining to filter strip	50% runoff reduction volume for treated area	0.50	0.00	0	0	0	0	0.00	0.00	0.00	0.00	

TOTAL IMPERVIOUS COVER TREATED (ac) 0.00
TOTAL TURF AREA TREATED (ac) 0.00

AREA CHECK OK.

TOTAL PHOSPHORUS REMOVAL REQUIRED ON SITE (lb/yr) 45.17
TOTAL RUNOFF REDUCTION IN D.A. A (cf) 0
PHOSPHORUS REMOVAL FROM RUNOFF REDUCTION PRACTICES IN D.A. A (lb/yr) 0.00

Apply Practices that Remove Pollutants but Do Not Reduce Runoff Volume

Practice	Unit	Description of Credit	Credit	Credit Area (acres)	Volume from Upstream RR Practice (cf)	Runoff Reduction (cf)	Remaining Runoff Volume (cf)	Phosphorus Efficiency (%)	Phosphorus Load from Upstream RR Practices (lbs)	Untreated Phosphorus Load to Practice (lbs)	Phosphorus Removed By Practice (lbs)	Remaining Phosphorus Load (lbs)	Downstream Treatment to be Employed
10. Wet Swale (Coastal Plain)													
10.a. Wet Swale #1 (Spec #11)	impervious acres draining to wet swale	0% runoff volume reduction	0.00	0.00	0	0	0	20	0.00	0.00	0.00	0.00	
	turf acres draining to wet swale	0% runoff volume reduction	0.00	0.00	0	0	0	20	0.00	0.00	0.00	0.00	
10.b. Wet Swale #2 (Spec #11)	impervious acres draining to wet swale	0% runoff volume reduction	0.00	0.00	0	0	0	40	0.00	0.00	0.00	0.00	
	turf acres draining to wet swale	0% runoff volume reduction	0.00	0.00	0	0	0	40	0.00	0.00	0.00	0.00	
11. Filtering Practices													
11.a Filtering Practice #1 (Spec #12)	impervious acres draining to filter	0% runoff volume reduction	0.00	0.00	0	0	0	60	0.00	0.00	0.00	0.00	
	turf acres draining to filter	0% runoff volume reduction	0.00	0.00	0	0	0	60	0.00	0.00	0.00	0.00	
11.b. Filtering Practice #2 (Spec #12)	impervious acres draining to filter	0% runoff volume reduction	0.00	0.00	0	0	0	65	0.00	0.00	0.00	0.00	
	turf acres draining to filter	0% runoff volume reduction	0.00	0.00	0	0	0	65	0.00	0.00	0.00	0.00	
12. Constructed Wetland													
12.a Constructed Wetland #1 (Spec #13)	impervious acres draining to wetland	0% runoff volume reduction	0.00	0.00	0	0	0	50	0.00	0.00	0.00	0.00	
	turf acres draining to wetland	0% runoff volume reduction	0.00	0.00	0	0	0	50	0.00	0.00	0.00	0.00	
12.b. Constructed Wetland #2 (Spec #13)	impervious acres draining to wetland	0% runoff volume reduction	0.00	0.00	0	0	0	75	0.00	0.00	0.00	0.00	
	turf acres draining to wetland	0% runoff volume reduction	0.00	0.00	0	0	0	75	0.00	0.00	0.00	0.00	
13. Wet Ponds													
13.a. Wet Pond #1 (Spec #14)	impervious acres draining to wet pond	0% runoff volume reduction	0.00	0.00	0	0	0	50	0.00	0.00	0.00	0.00	
	turf acres draining to wet pond	0% runoff volume reduction	0.00	0.00	0	0	0	50	0.00	0.00	0.00	0.00	
13.b. Wet Pond #1 (Coastal Plain) (Spec #14)	impervious acres draining to wet pond	0% runoff volume reduction	0.00	0.00	0	0	0	45	0.00	0.00	0.00	0.00	
	turf acres draining to wet pond	0% runoff volume reduction	0.00	0.00	0	0	0	45	0.00	0.00	0.00	0.00	
13.c. Wet Pond #2 (Spec #14)	impervious acres draining to wet pond	0% runoff volume reduction	0.00	0.00	0	0	0	75	0.00	0.00	0.00	0.00	
	turf acres draining to wet pond	0% runoff volume reduction	0.00	0.00	0	0	0	75	0.00	0.00	0.00	0.00	
13.d. Wet Pond #2 (Coastal Plain) (Spec #14)	impervious acres draining to wet pond	0% runoff volume reduction	0.00	0.00	0	0	0	65	0.00	0.00	0.00	0.00	
	turf acres draining to wet pond	0% runoff volume reduction	0.00	0.00	0	0	0	65	0.00	0.00	0.00	0.00	
14. Manufactured BMP													
Manufactured Device	impervious acres draining to device	0% runoff volume reduction	0.00	23.66	0	0	81557	50	0.00	51.18	25.59	25.59	
	turf acres draining to device	0% runoff volume reduction	0.00	13.92	0	0	11768	50	0.00	7.39	3.69	3.69	

TOTAL IMPERVIOUS COVER TREATED (ac) 23.66
TOTAL TURF AREA TREATED (ac) 13.92

AREA CHECK OK.

PHOSPHORUS REMOVAL BY PRACTICES THAT DO NOT REDUCE RUNOFF VOLUME IN D.A. A 29.28
TOTAL PHOSPHORUS REMOVAL IN D.A. A (lb/yr) 29.28

SEE WATER QUALITY COMPLIANCE TAB FOR SITE COMPLIANCE CALCULATIONS

NITROGEN REMOVAL BY PRACTICES THAT DO NOT REDUCE RUNOFF VOLUME IN D.A. A 0.00
TOTAL NITROGEN REMOVAL IN D.A. A (lb/yr) 0.00

Bowman CONSULTING

Bowman Consulting Group, Ltd.
101 South Street, S.E.
Leesburg, Virginia 20175
Phone: (703) 443-2400
Fax: (703) 443-2425
www.bowmanconsulting.com
© Bowman Consulting Group, Ltd.

BMP COMPUTATIONS

CRESCENT PARKE
ZONING MAP AMENDMENT

TOWN OF LEESBURG LOUDOUN COUNTY, VIRGINIA

PLAN STATUS	
2/11/2014	PER CHECKLIST COMMENTS
9/17/2014	PER TOWN COMMENTS
12/23/2014	PER TOWN COMMENTS
04/17/2015	PER TOWN COMMENTS
08/28/2015	PER TOWN COMMENTS
12/23/2015	PER TOWN COMMENTS
03/07/2016	PER TOWN COMMENTS
04/29/2016	TC SUBMISSION
07/01/2016	TC SUBMISSION
07/07/2016	TC SUBMISSION
DATE	DESCRIPTION

BBR DESIGN | CIM DRAWN | CMM CHKD

SCALE H: AS NOTED V:

JOB No. 2616-06-001

DATE DEC. 23, 2013

FILE No. 2616-D-ZP-001

SHEET 17 OF 37

Cad file name: \\clyde\new_projects\02616 - leesburg crossroads - mrec\02616-06-001 (pin) - leesburg crossroads rezoning\Planning\Rezoning\Sheet2616-D-ZP-001-00-BMP-COMPS.dwg

THIS SHEET INTENTIONALLY LEFT BLANK

Bowman CONSULTING

Bowman Consulting Group, Ltd.
101 South Street, S. E.
Leesburg, Virginia 20175
Phone: (703) 443-2400
Fax: (703) 443-2425
www.bowmanconsulting.com
© Bowman Consulting Group, Ltd.

BMP COMPUTATIONS

CRESCENT PARKE
ZONING MAP AMENDMENT

TOWN OF LEESBURG
LOUDOUN COUNTY, VIRGINIA

PLAN STATUS	
2/11/2014	PER CHECKLIST COMMENTS
9/17/2014	PER TOWN COMMENTS
12/23/2014	PER TOWN COMMENTS
04/17/2015	PER TOWN COMMENTS
08/28/2015	PER TOWN COMMENTS
12/23/2015	PER TOWN COMMENTS
03/07/2016	PER TOWN COMMENTS
04/29/2016	TC SUBMISSION
07/01/2016	TC SUBMISSION
07/07/2016	TC SUBMISSION
DATE	DESCRIPTION

BBR	CIM	CMM
DESIGN	DRAWN	CHKD

SCALE H: AS NOTED V:

JOB No. 2616-06-001

DATE DEC. 23, 2013

FILE No. 2616-D-ZP-001

Cad file name: \\clyde\new_projects\002616 - leesburg crossroads - mrec\002616-06-001 (pm) - leesburg crossroads rezoning\Planning\Rezoning\Sheet2616-D-ZP-001-00-BMP-COMPS.dwg

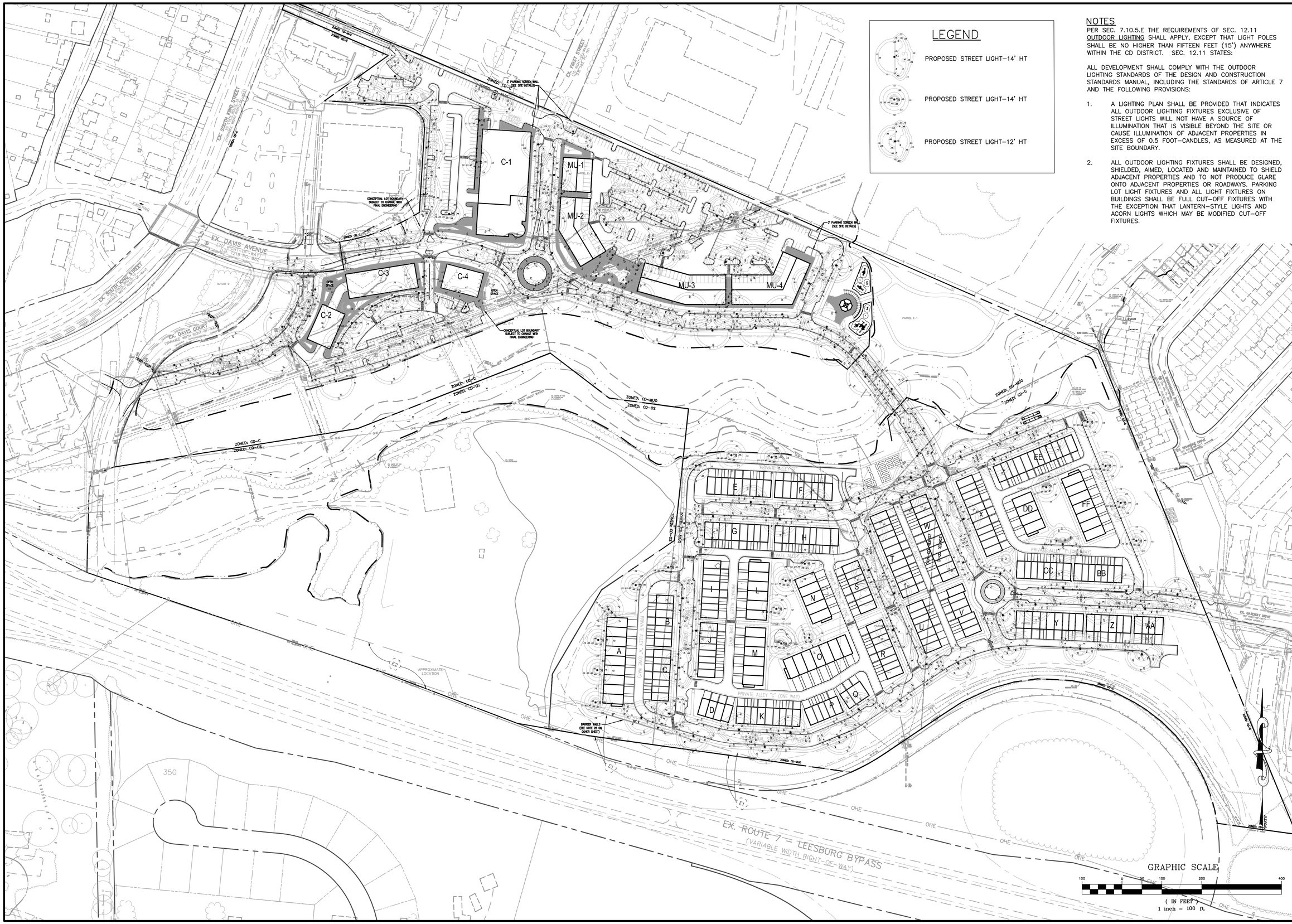

LEGEND

PROPOSED STREET LIGHT–14' HT

PROPOSED STREET LIGHT–14' HT

PROPOSED STREET LIGHT–12' HT

NOTES

PER SEC. 7.10.5.E THE REQUIREMENTS OF SEC. 12.11 OUTDOOR LIGHTING SHALL APPLY, EXCEPT THAT LIGHT POLES SHALL BE NO HIGHER THAN FIFTEEN FEET (15') ANYWHERE WITHIN THE CD DISTRICT. SEC. 12.11 STATES:

ALL DEVELOPMENT SHALL COMPLY WITH THE OUTDOOR LIGHTING STANDARDS OF THE DESIGN AND CONSTRUCTION STANDARDS MANUAL, INCLUDING THE STANDARDS OF ARTICLE 7 AND THE FOLLOWING PROVISIONS:

1. A LIGHTING PLAN SHALL BE PROVIDED THAT INDICATES ALL OUTDOOR LIGHTING FIXTURES EXCLUSIVE OF STREET LIGHTS WILL NOT HAVE A SOURCE OF ILLUMINATION THAT IS VISIBLE BEYOND THE SITE OR CAUSE ILLUMINATION OF ADJACENT PROPERTIES IN EXCESS OF 0.5 FOOT–CANDLES, AS MEASURED AT THE SITE BOUNDARY.
2. ALL OUTDOOR LIGHTING FIXTURES SHALL BE DESIGNED, SHIELDED, AIMED, LOCATED AND MAINTAINED TO SHIELD ADJACENT PROPERTIES AND TO NOT PRODUCE GLARE ONTO ADJACENT PROPERTIES OR ROADWAYS. PARKING LOT LIGHT FIXTURES AND ALL LIGHT FIXTURES ON BUILDINGS SHALL BE FULL CUT–OFF FIXTURES WITH THE EXCEPTION THAT LANTERN–STYLE LIGHTS AND ACORN LIGHTS WHICH MAY BE MODIFIED CUT–OFF FIXTURES.

Bowman CONSULTING

Bowman Consulting Group, Ltd.
101 South Street, S. E.
Leesburg, Virginia 20175
Phone: (703) 443-2400
Fax: (703) 443-2425
www.bowmanconsulting.com

© Bowman Consulting Group, Ltd.

LIGHTING PLAN

CRESCENT PARKE

ZONING MAP AMENDMENT

TOWN OF LEESBURG

LOUDOUN COUNTY, VIRGINIA

PLAN STATUS	
2/11/2014	PER CHECKLIST COMMENTS
9/17/2014	PER TOWN COMMENTS
12/23/2014	PER TOWN COMMENTS
04/17/2015	PER TOWN COMMENTS
08/28/2015	PER TOWN COMMENTS
12/23/2015	PER TOWN COMMENTS
03/07/2016	PER TOWN COMMENTS
04/29/2016	TC SUBMISSION
07/01/2016	TC SUBMISSION
07/07/2016	TC SUBMISSION
DATE	DESCRIPTION

BBR DESIGN	CIM DRAWN	CMM CHKD
SCALE	H: AS NOTED V:	
JOB No.	2616–06–001	
DATE	DEC. 23, 2013	
FILE No.	2616–D–ZP–001	

SHEET 19 OF 37

Cad file name: \\clyde\new_projects\002616 – leesburg crossroads – mrec\002616-06-001 (pln) – leesburg crossroads rezoning\Planning\Rezoning\Sheet2616-Lighting Plan.dwg

ⓔ STREETWORKS™ energy solutions

DESCRIPTION

The ACN-C/ARC-C/CLB-C Cutoff Generation Series is the marriage of traditional shapes and contemporary styling. The CVL optical systems achieve an IES cutoff classification while providing excellent performance and uniformity. Its styling blends well in many settings - downtown streetscapes, roadways, residential neighbor hoods and city parks.

Catalog #		Type
Project		
Comments		Date
Prepared by		

SPECIFICATION FEATURES

Construction
HOUSING: Heavy-duty cast aluminum housing and removable door 3G vibration tested to ensure strength of construction and longevity in application. A single quarter turn fastener on the removable door provides tool-less access to the electrical compartment, terminal block and the optional internally mounted photocontrol receptacle for ease of installation and maintenance. CAGE ASSEMBLIES: Cage assembly uprights and medallions are manufactured of heavy-duty cast aluminum and mounted to the exterior of the base housing via four stainless steel fasteners. Cage rings constructed of extruded aluminum and finished to match housing. TOPS AND FINIALS: Choose from three spun aluminum tops and four cast aluminum finials for customized fixture style. All hard mount tops are made of heavy-duty spun aluminum. Select spun tops offer top access for tool-less entrance into the lamp compartment during relamping or maintenance.

Electrical
HID ballast assembly mounted to a tool-less removable tray with quick disconnects for ease of installation and maintenance. Wide tool-less access door provides ample hand and tool room for terminal block and plug-in starter access. Available with HID sources up to 400W metal halide or 250W high pressure sodium.

Optical
GLOBE: Clear injection molded lighting grade acrylic lens ensures long lasting optical clarity and resistance to the gradual discoloration that results from exposure to sunlight or UV radiating sources. REFLECTOR AND CHIMNEY: Generation Series CVL cutoff luminaires equipped with multifaceted, precision formed Type III Cutoff or Type V Cutoff optical systems. Chimney housing electrical components supplied standard with a brushed aluminum finish or with an optional matte black or copper anodized finish.

Mounting
Base casting slipfits over a standard 3" O.D. tenon and secured via four stainless steel allen head fasteners. 3G vibration tested.

Finish
Cast and spun components finished in a five-stage premium TGIC polyester powder coat paint, 2.5 mil nominal thickness for superior protection against fade and wear. Consult your Streetworks representative for a complete selection of standard colors include black, bronze, grey, white, dark platinum, graphite metallic and hartford green. RAL and custom color matches available.

DIMENSIONS

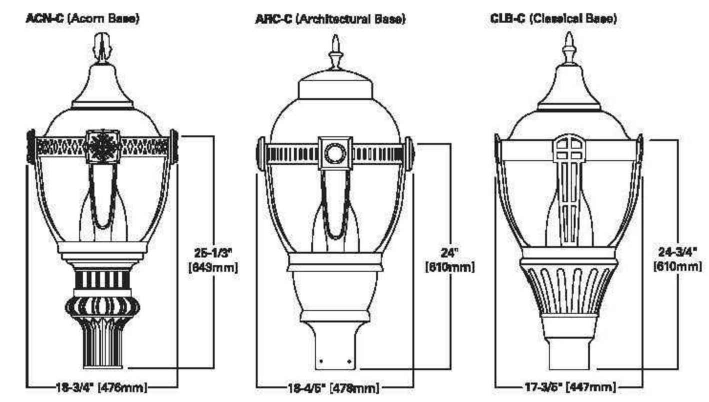

ACN-C/ARC-C/ CLB-C CUTOFF GENERATION SERIES

50 - 400W
Pulse Start Metal Halide
High Pressure Sodium
Metal Halide

DECORATIVE POST TOP LUMINAIRE

EPA
Effective Projected Area: 2.1

SHIPPING DATA
Approximate Net Wt: 50 lbs. (23 kgs.)

Cooper Lighting by EATON

ADW141660
2014-06-26 08:07:12

1.1 STREET LIGHT
PRODUCT INFORMATION

N.T.S.

ACN-C/ARC-C/CLB-C CUTOFF GENERATION SERIES

CONFIGURATIONS

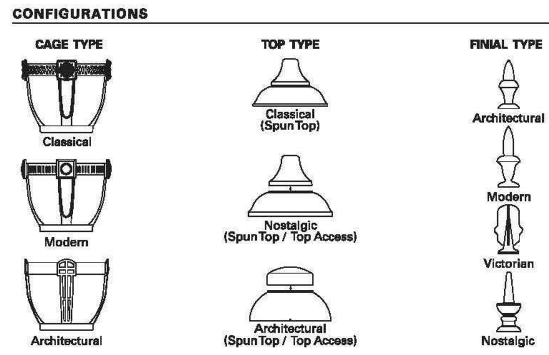

ORDERING INFORMATION

Sample Number: ACN25MWW5C143BK

Product Family	Lamp Wattage	Lamp Type [4]	Ballast Type [4]	Voltage [4]	Refractor Type	Cage Type	Top Type	Finial Type
ACN=Acorn Base ARC=Architectural Base CLB=Classical Base	Pulse Start Metal Halide [1] 70=70W 10=100W 15=150W 25=250W 32=320W High Pressure Sodium 50=50W 70=70W 10=100W 15=150W 25=250W Probe Start Metal Halide [2] 17=175W 25=250W 40=400W [3]	P=Pulse Start Metal Halide S=High Pressure Sodium M=Probe Start Metal Halide	H=Reac./HPF K=10kV CWA [5] N=Hi.Reac./NPF P=Hi.Reac./HPF R=Hi.Reac./NPF [6] W=CWA	2=120V 0=208V 4=240V 7=277V 8=480V 9=347V W=Multi-Tap wired 120V N=Multi-Tap wired 277V	3C=Type III Cutoff 5C=Type V Cutoff	Classical 1=Classical A=Classical Sun Gold B=Classical Antique Gold C=Classical Colonial Bronze Modern 2=Modern D=Modern Sun Gold E=Modern Antique Gold F=Modern Colonial Bronze Architectural 3=Architectural G=Architectural Sun Gold H=Architectural Antique Gold J=Architectural Colonial Bronze X=None	1=Acorn 2=Modern 3=Victorian 4=Classical 6=Nostalgic (Top Access) 7=Architectural (Top Access)	1=Victorian 2=Modern 3=Architectural 4=Nostalgic X=None

Color	Options (Add as Suffix)	Accessories (Order Separately)
AP=Grey BZ=Bronze BK=Black DP=Dark Platinum GN=Hartford Green GM=Graphite Metallic WH=White	CEC=California Title 20 Compliant Ballast (Applies to 175-320W Pulse Start Metal Halide Only) 1=Single Fuse (120, 277 or 347V. Specify Voltage) 2=Double Fuse (208, 240 or 480V. Specify Voltage) 4=NEMA Photocontrol Receptacle A=Twistlock Globe R=Downlight Reflector L=Lamp Included C=Copper Accents [7] U=UL/CSA Listed Y=Black Chimney HS=House Side Shield	MA1220=House Side Shield - Cutoff

NOTES:
1. Medium-base socket standard for up to 150W Metal Halide.
2. Probe Start Metal Halide available for non-US markets only (175-400W).
3. 400W Metal Halide requires reduced jacket ED-28 lamp. Not Available in 480V.
4. Refer to the technical section for lamp/ballast/voltage compatibility.
5. Available 50-150W. 120/240V or single voltage only.
6. Available in 120V only.
7. Chimney and access top finished in copper.

Cooper Lighting by EATON

Eaton
1000 Eaton Boulevard
Cleveland, OH 44122
United States
Eaton.com

Eaton's Cooper Lighting Business
1121 Highway 74 South
Peachtree City, GA 30269
P: 770-486-4800
www.cooperlighting.com

Specifications and dimensions subject to change without notice.

ADW141660
2014-06-26 08:07:12

1.2 STREET LIGHT
PRODUCT INFORMATION

N.T.S.

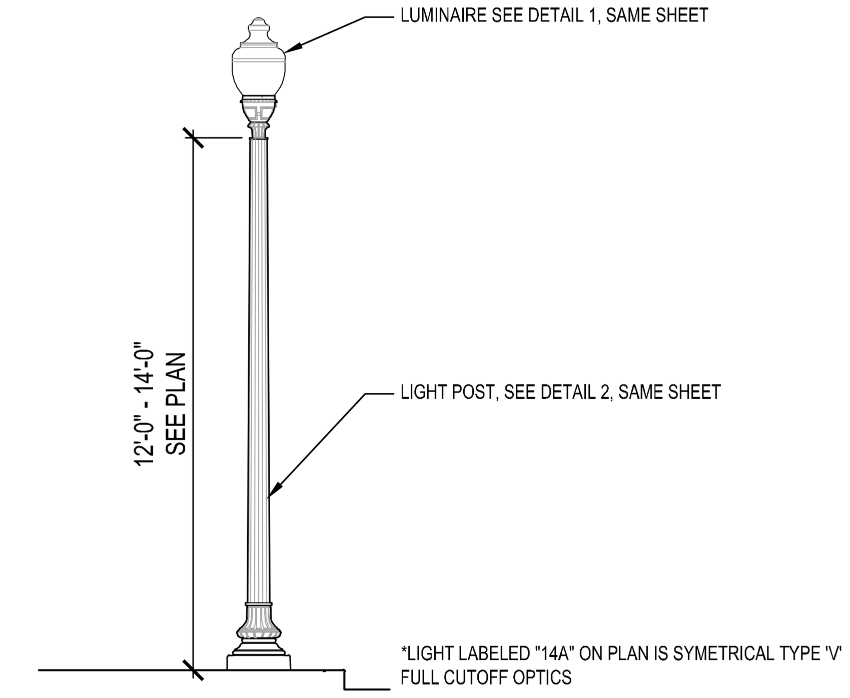

TYPICAL STREET LIGHT DETAIL
N.T.S.

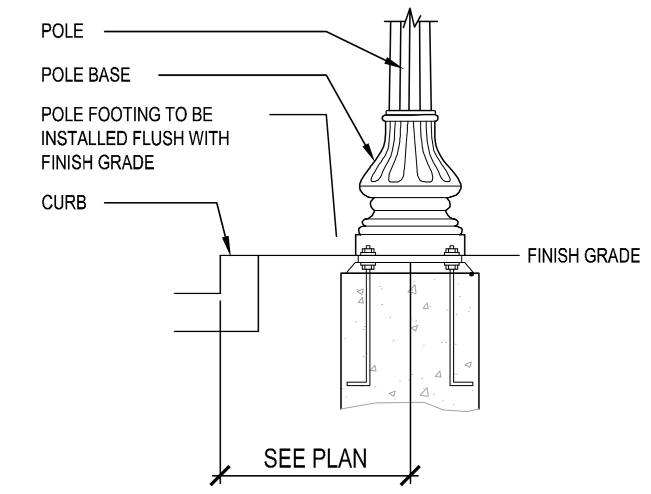

PRIVATE STREET LIGHT
DAVIS AVE/ GATEWAY DRIVE LIGHT

NOTE:
1. POLE HEIGHT INCLUDES BASE.
2. LUMINAIRE PRODUCT SPECIFICATIONS TO BE PROVIDED WITH FINAL ENGINEERING AND INCORPORATED INTO CORRESPONDING PHOTOMETRIC ANALYSIS ACCORDINGLY.
3. THE LIGHT BULB MUST BE COMPLETELY IN THE OPAQUE TOP (CROWN) OF THE FIXTURE AND NOT PROTRUDE BEYOND THE BOTTOM OF THE CROWN.
4. THIS PLAN ONLY DEPICTS GENERAL LIGHT LOCATIONS AND LIGHTING DISTRIBUTION PATTERNS. FINAL LIGHT LOCATIONS AND LIGHTING DISTRIBUTION PATTERNS SHALL BE DETERMINED WITH PHOTOMETRIC ANALYSIS AT FINAL ENGINEERING.
5. SHIELDS SHALL BE ADDED TO STREETLIGHTS TO MORE EFFECTIVELY DILUTE THE AMOUNT OF LIGHT THAT IS CAST UPON THE DWELLING UNITS AND REDUCE LIGHT TRESPASS ONTO ADJACENT PROPERTIES.
6. THE LIGHTS IDENTIFIED HEREON INDICATE WHAT IS CURRENTLY AVAILABLE FROM DOMINION BUT MAY BE SUBJECT TO CHANGE BASED ON AVAILABILITY.

Dominion

Pole - Decorative Round Tapered Fluted Composite

Fluted round tapered poles constructed of heavy duty fiberglass reinforced pigmented polyester plastic resin with a decorative base for pole top luminaires.

- Poles available directly embeded or base mounted for use with underground supply conductors only.
- Single pole top luminaire only.
- Available for use with:
  - Decorative Colonial Luminaire
  - Acorn Luminaire
  - Carlyle Acorn Luminaire
  - Decorative Acorn Luminaire
- Anchor base poles require customer provided pole foundation and anchor bolts.

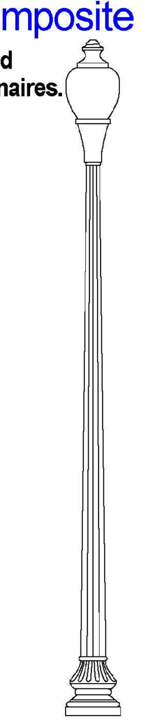

Pole Specifications:

Total Length (Feet)	Base Diameter (Inches)	Base Height (Inches)	Pole Top Diameter (Inches)	Embed Depth (Feet)	Luminaire Mounting Height (Feet)	Tenon Size	Finish Color	WMIS CU Assembly	Pole Only Stock #
13	16.5	20.0	5.0	3.0	10.0	3.0" O.D. X 3.5"	Black (RAL 9005)	PFF13	50498500
15	16.5	20.0	5.0	3.0	12.0	3.0" O.D. X 3.5"	Black (RAL 9005)	PFF15	50499000
15	16.5	20.0	5.0	3.0	12.0	3.0" O.D. X 3.5"	Dark Green (RAL 9005)	PFF15GN	42062744
18	16.5	20.0	5.0	4.0	14.0	3.0" O.D. X 3.5"	Black (RAL 9005)	PFF18	50499200
18	16.5	20.0	5.0	4.0	14.0	3.0" O.D. X 3.5"	Dark Green (RAL 9005)	PFF18GN	42062745
10	16.5	20.0	5.4	A.B.	10.0	3.0" O.D. X 3.5"	Black (RAL 9005)	PFF10AB	50497900
12	16.5	20.0	5.4	A.B.	12.0	3.0" O.D. X 3.5"	Black (RAL 9005)	PFF12AB	50498100
12	16.5	20.0	5.4	A.B.	12.0	3.0" O.D. X 3.5"	Dark Green (RAL 9005)	PFF12ABGN	42062746
14	16.5	20.0	5.4	A.B.	14.0	3.0" O.D. X 3.5"	Black (RAL 9005)	PFF14AB	50498300
14	16.5	20.0	5.4	A.B.	14.0	3.0" O.D. X 3.5"	Dark Green (RAL 9005)	PFF14ABGN	42062757

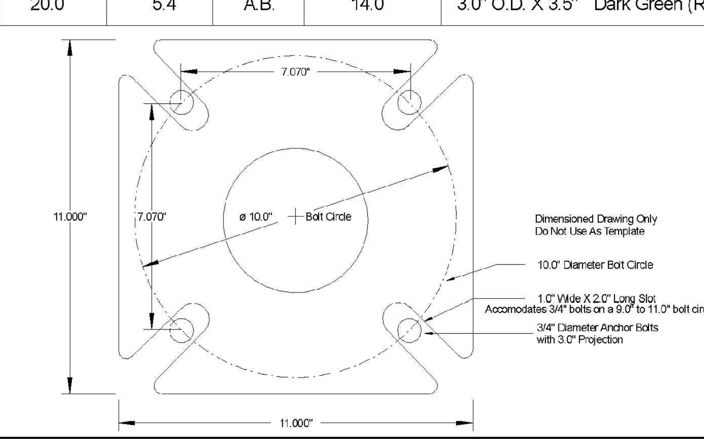

*MOUNTING HEIGHT VARIES, SEE PLAN

2 DAVIS AVE / GATEWAY DRIVE
PRODUCT INFORMATION

N.T.S.

Bowman CONSULTING

Bowman Consulting Group, Ltd.
101 South Street, S. E.
Leesburg, Virginia 20175
Phone: (703) 443-2400
Fax: (703) 443-2425
www.bowmanconsulting.com

© Bowman Consulting Group, Ltd.

LIGHTING DETAILS
CRESCENT PARKE
ZONING MAP AMENDMENT
TOWN OF LEESBURG
LOUDOUN COUNTY, VIRGINIA

PLAN STATUS	
2/11/2014	PER CHECKLIST COMMENTS
9/17/2014	PER TOWN COMMENTS
12/23/2014	PER TOWN COMMENTS
04/17/2015	PER TOWN COMMENTS
08/28/2015	PER TOWN COMMENTS
12/23/2015	PER TOWN COMMENTS
03/07/2016	PER TOWN COMMENTS
04/29/2016	TC SUBMISSION
07/01/2016	TC SUBMISSION
07/07/2016	TC SUBMISSION
DATE	DESCRIPTION

BBR DESIGN	CIM DRAWN	CMM CHKD

SCALE H: AS NOTED V:
JOB No. 2616-06-001
DATE DEC. 23, 2013
FILE No. 2616-D-ZP-001
SHEET 20 OF 37

Cad file name: \\clyde\new_projects\002616 - leesburg crossroads - mrec\002616-06-001 (pln) - leesburg crossroads rezoning\Planning\Rezoning\Sheet2616-Lighting Details.dwg

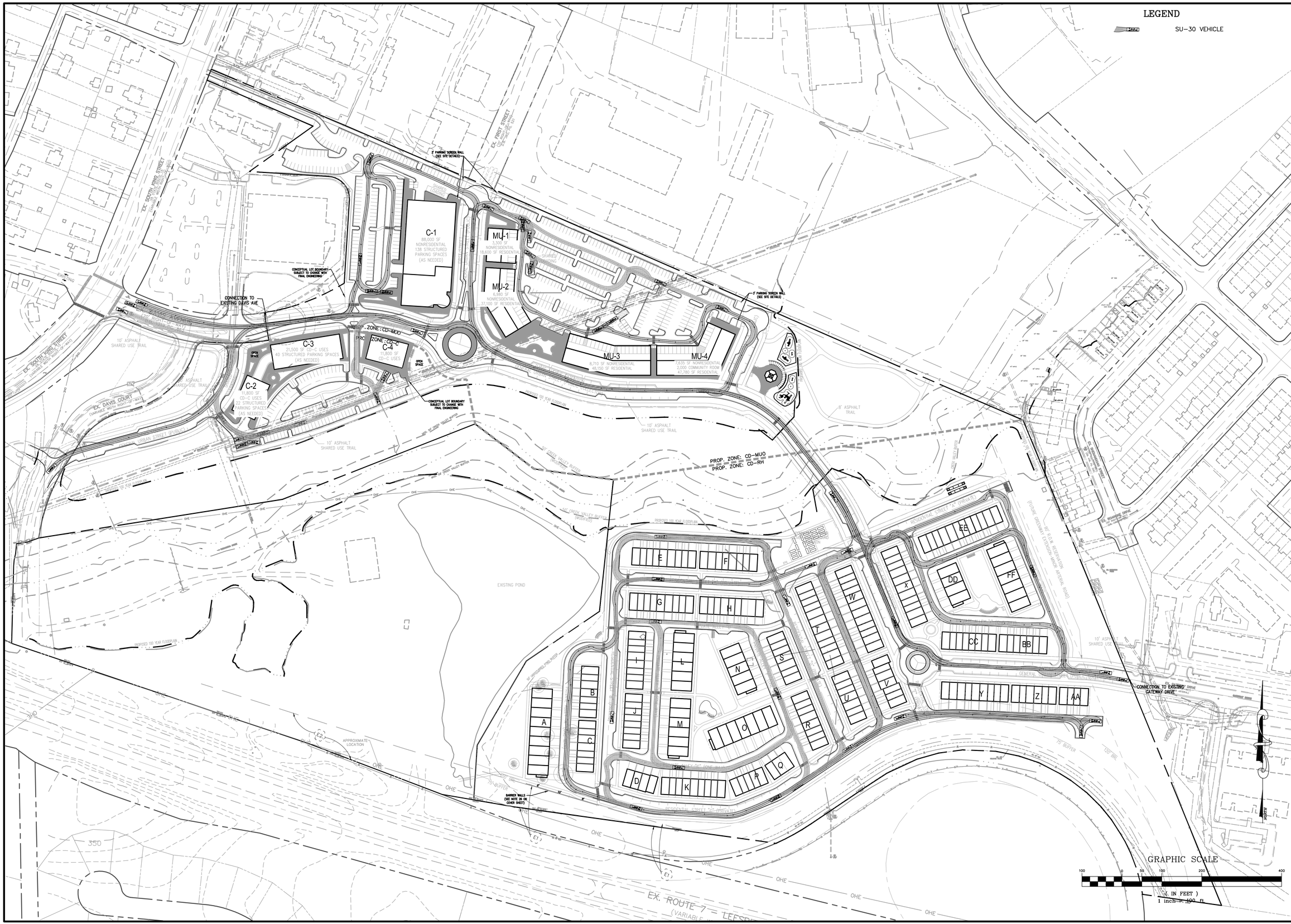

Bowman CONSULTING

Bowman Consulting Group, Ltd.
101 South Street, S. E.
Leesburg, Virginia 20175
Phone: (703) 443-2400
Fax: (703) 443-2425
www.bowmanconsulting.com
© Bowman Consulting Group, Ltd.

SU-30 AUTO-TURN PLAN

CRESCENT PARKE

ZONING MAP AMENDMENT

TOWN OF LEESBURG

LOUDOUN COUNTY, VIRGINIA

PLAN STATUS	
2/11/2014	PER CHECKLIST COMMENTS
9/17/2014	PER TOWN COMMENTS
12/23/2014	PER TOWN COMMENTS
04/17/2015	PER TOWN COMMENTS
08/28/2015	PER TOWN COMMENTS
12/23/2015	PER TOWN COMMENTS
03/07/2016	PER TOWN COMMENTS
04/29/2016	TC SUBMISSION
07/01/2016	TC SUBMISSION
07/07/2016	TC SUBMISSION
DATE	DESCRIPTION

BBR DESIGN	CIM DRAWN	CMM CHKD
SCALE	H: AS NOTED V:	
JOB No.	2616-06-001	
DATE	DEC. 23, 2013	
FILE No.	2616-D-ZP-001	

SHEET 21 OF 37

Cad file name: \\clyde\new_projects\002616 - leesburg crossroads - mrec\002616-06-001 (pln) - leesburg crossroads rezoning\Planning\Rezoning\Sheet2616- Auto-Turn Plan.dwg

LEGEND

SU-40 VEHICLE

C-1
88,000 SF
NONRESIDENTIAL
138 STRUCTURED
PARKING SPACES
(AS NEEDED)

MU-1
2,500 SF
NONRESIDENTIAL
18,600 SF RESIDENTIAL

MU-2
6,350 SF
NONRESIDENTIAL
37,100 SF RESIDENTIAL

MU-3
8,710 SF NONRESIDENTIAL
48,150 SF RESIDENTIAL

MU-4
7,635 SF NONRESIDENTIAL
2,000 COMMUNITY ROOM
47,780 SF RESIDENTIAL

C-2
11,800 SF
CD-C USES
22 STRUCTURED
PARKING SPACES
(AS NEEDED)

C-3
21,500 SF CD-C USES
40 STRUCTURED PARKING SPACES
(AS NEEDED)

C-4
11,800 SF
CD-C USES

PROP. ZONE: CD-MUO

PROP. ZONE: CD-RH

EX. DAVIS AVENUE

EX. SOUTH KING STREET

EX. DAVIS COURT

EX. FIRST STREET

DAVIS AVENUE EXTENSION

RESIDENTIAL STREET "A" (PRIVATE)

RESIDENTIAL STREET "B" (PRIVATE)

CONNECTION TO EXISTING DAVIS AVE

CONNECTION TO EXISTING GATEWAY DRIVE

CONCEPTUAL LOT BOUNDARY SUBJECT TO CHANGE WITH FINAL ENGINEERING

7' PARKING SCREEN WALL (SEE SITE DETAILS)

BARRIER WALLS (SEE NOTE 26 ON COVER SHEET)

10' ASPHALT SHARED USE TRAIL

8' ASPHALT TRAIL

EXISTING POND

EX. ROUTE 7 – LEESBURG BYPASS

GRAPHIC SCALE

(IN FEET)
1 inch = 100 ft.

Bowman CONSULTING

Bowman Consulting Group, Ltd.
101 South Street, S. E.
Leesburg, Virginia 20175
Phone: (703) 443-2400
Fax: (703) 443-2425
www.bowmanconsulting.com

© Bowman Consulting Group, Ltd.

SU-40 AUTO-TURN PLAN

CRESCENT PARKE

ZONING MAP AMENDMENT

TOWN OF LEESBURG

LOUDOUN COUNTY, VIRGINIA

PLAN STATUS	
2/11/2014	PER CHECKLIST COMMENTS
9/17/2014	PER TOWN COMMENTS
12/23/2014	PER TOWN COMMENTS
04/17/2015	PER TOWN COMMENTS
08/28/2015	PER TOWN COMMENTS
12/23/2015	PER TOWN COMMENTS
03/07/2016	PER TOWN COMMENTS
04/29/2016	TC SUBMISSION
07/01/2016	TC SUBMISSION
07/07/2016	TC SUBMISSION
DATE	DESCRIPTION

BBR DESIGN	CIM DRAWN	CMM CHKD
SCALE	H: AS NOTED V:	
JOB No. 2616-06-001		
DATE DEC. 23, 2013		
FILE No. 2616-D-ZP-001		

SHEET 22 OF 37

Cad file name: \\dilyd4\new_projects\002616 - leesburg crossroads - mmc\002616-06-001 (pin) - leesburg crossroads rezoning\Planning\Rezoning\Sheet2616- Auto-Turn Plan.dwg

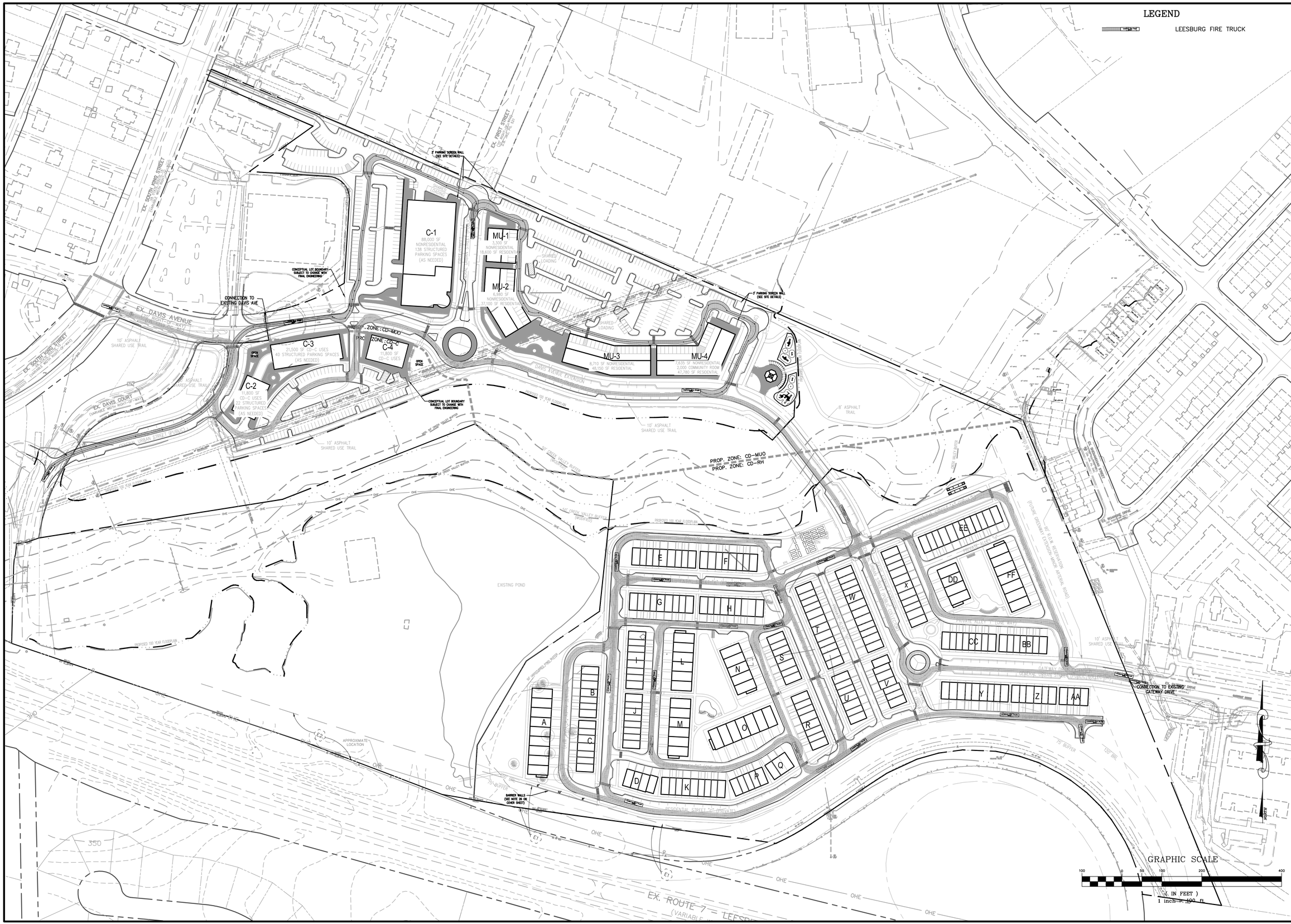

Bowman CONSULTING

Bowman Consulting Group, Ltd.
101 South Street, S. E.
Leesburg, Virginia 20175
Phone: (703) 443-2400
Fax: (703) 443-2425
www.bowmanconsulting.com
© Bowman Consulting Group, Ltd.

FIRE TRUCK AUTO-TURN PLAN

CRESCENT PARKE

ZONING MAP AMENDMENT

TOWN OF LEESBURG

LOUDOUN COUNTY, VIRGINIA

PLAN STATUS	
2/11/2014	PER CHECKLIST COMMENTS
9/17/2014	PER TOWN COMMENTS
12/23/2014	PER TOWN COMMENTS
04/17/2015	PER TOWN COMMENTS
08/28/2015	PER TOWN COMMENTS
12/23/2015	PER TOWN COMMENTS
03/07/2016	PER TOWN COMMENTS
04/29/2016	TC SUBMISSION
07/01/2016	TC SUBMISSION
07/07/2016	TC SUBMISSION

DATE	DESCRIPTION	
BBR DESIGN	CIM DRAWN	CMM CHKD
SCALE	H: AS NOTED V:	
JOB No.	2616-06-001	
DATE	DEC. 23, 2013	
FILE No.	2616-D-ZP-001	

Cad file name: \\clyde\new_projects\002616 - leesburg crossroads - mrec\002616-06-001 (pln) - leesburg crossroads rezoning\Planning\Rezoning\Sheet2616- Auto-Turn Plan.dwg

Bowman CONSULTING

Bowman Consulting Group, Ltd.
101 South Street, S. E.
Leesburg, Virginia 20175
Phone: (703) 443-2400
Fax: (703) 443-2425
www.bowmanconsulting.com
© Bowman Consulting Group, Ltd.

PEDESTRIAN NETWORK & KEY OPEN SPACE AREAS MAP

CRESCENT PARKE

ZONING MAP AMENDMENT

TOWN OF LEESBURG LOUDOUN COUNTY, VIRGINIA

PLAN STATUS	
2/11/2014	PER CHECKLIST COMMENTS
9/17/2014	PER TOWN COMMENTS
12/23/2014	PER TOWN COMMENTS
04/17/2015	PER TOWN COMMENTS
08/28/2015	PER TOWN COMMENTS
12/23/2015	PER TOWN COMMENTS
03/07/2016	PER TOWN COMMENTS
04/29/2016	TC SUBMISSION
07/01/2016	TC SUBMISSION
07/07/2016	TC SUBMISSION
DATE	DESCRIPTION

BBR	CIM	CMM
DESIGN	DRAWN	CHKD

SCALE H: AS NOTED V:

JOB No. 2616-06-001

DATE DEC. 23, 2013

FILE No. 2616-D-ZP-001

SHEET 24 OF 37

Cad file name: \\alyde\new_projects\002616 - leesburg crossroads rezoning\Planning\Rezoning\Sheet2616- Pedestrian Network and Amenity Plan.dwg

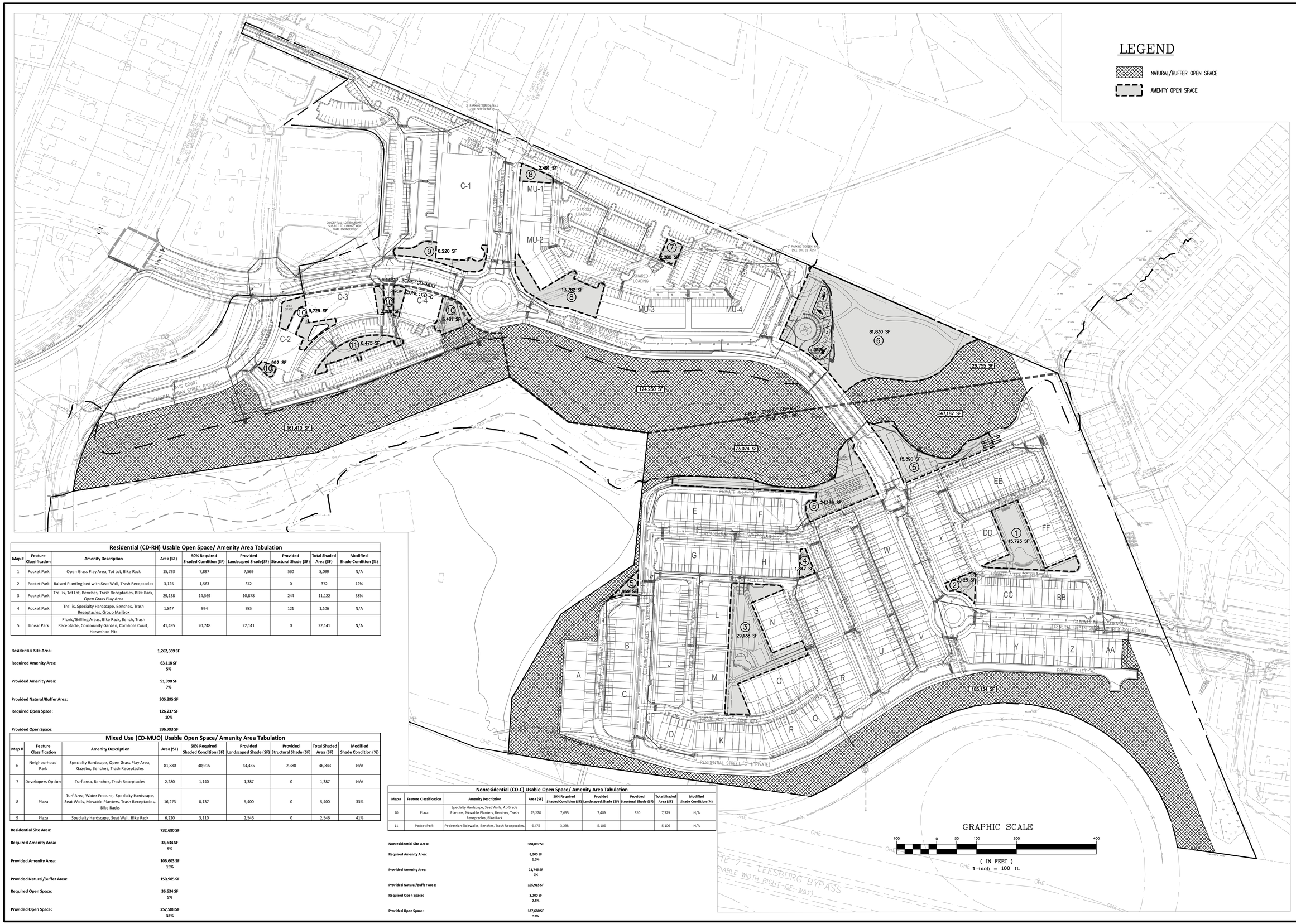

Residential (CD-RH) Usable Open Space/ Amenity Area Tabulation

Map #	Feature Classification	Amenity Description	Area (SF)	50% Required Shaded Condition (SF)	Provided Landscaped Shade (SF)	Provided Structural Shade (SF)	Total Shaded Area (SF)	Modified Shade Condition (%)
1	Pocket Park	Open Grass Play Area, Tot Lot, Bike Rack	15,793	7,897	7,569	530	8,099	N/A
2	Pocket Park	Raised Planting bed with Seat Wall, Trash Receptacles	3,125	1,563	372	0	372	12%
3	Pocket Park	Trellis, Tot Lot, Benches, Trash Receptacles, Bike Rack, Open Grass Play Area	29,138	14,569	10,878	244	11,122	38%
4	Pocket Park	Trellis, Specialty Hardscape, Benches, Trash Receptacles, Group Mailbox	1,847	924	985	121	1,106	N/A
5	Linear Park	Picnic/Grilling Areas, Bike Rack, Bench, Trash Receptacle, Community Garden, Cornhole Court, Horseshoe Pits	41,495	20,748	22,141	0	22,141	N/A

Residential Site Area: 1,262,369 SF

Required Amenity Area: 63,118 SF
5%

Provided Amenity Area: 91,398 SF
7%

Provided Natural/Buffer Area: 305,395 SF

Required Open Space: 126,237 SF
10%

Provided Open Space: 396,793 SF

Mixed Use (CD-MUO) Usable Open Space/ Amenity Area Tabulation

Map #	Feature Classification	Amenity Description	Area (SF)	50% Required Shaded Condition (SF)	Provided Landscaped Shade (SF)	Provided Structural Shade (SF)	Total Shaded Area (SF)	Modified Shade Condition (%)
6	Neighborhood Park	Specialty Hardscape, Open Grass Play Area, Gazebo, Benches, Trash Receptacles	81,830	40,915	44,455	2,388	46,843	N/A
7	Developers Option	Turf area, Benches, Trash Receptacles	2,280	1,140	1,387	0	1,387	N/A
8	Plaza	Turf Area, Water Feature, Specialty Hardscape, Seat Walls, Movable Planters, Trash Receptacles, Bike Racks	16,273	8,137	5,400	0	5,400	33%
9	Plaza	Specialty Hardscape, Seat Wall, Bike Rack	6,220	3,110	2,546	0	2,546	41%

Residential Site Area: 732,680 SF

Required Amenity Area: 36,634 SF
5%

Provided Amenity Area: 106,603 SF
15%

Provided Natural/Buffer Area: 150,985 SF

Required Open Space: 36,634 SF
5%

Provided Open Space: 257,588 SF
35%

Nonresidential (CD-C) Usable Open Space/ Amenity Area Tabulation

Map #	Feature Classification	Amenity Description	Area (SF)	50% Required Shaded Condition (SF)	Provided Landscaped Shade (SF)	Provided Structural Shade (SF)	Total Shaded Area (SF)	Modified Shade Condition (%)
10	Plaza	Specialty Hardscape, Seat Walls, At-Grade Planters, Movable Planters, Benches, Trash Receptacles, Bike Rack	15,270	7,635	7,409	320	7,729	N/A
11	Pocket Park	Pedestrian Sidewalks, Benches, Trash Receptacles,	6,475	3,238	5,106		5,106	N/A

Nonresidential Site Area: 328,007 SF

Required Amenity Area: 8,200 SF
2.5%

Provided Amenity Area: 21,745 SF
7%

Provided Natural/Buffer Area: 165,915 SF

Required Open Space: 8,200 SF
2.5%

Provided Open Space: 187,660 SF
57%

Bowman CONSULTING

Bowman Consulting Group, Ltd.
101 South Street, S. E.
Leesburg, Virginia 20175
Phone: (703) 443-2400
Fax: (703) 443-2425
www.bowmanconsulting.com
© Bowman Consulting Group, Ltd.

CONCEPTUAL OPEN SPACE PLAN
CRESCENT PARKE
ZONING MAP AMENDMENT
TOWN OF LEESBURG
LOUDOUN COUNTY, VIRGINIA

PLAN STATUS	
2/11/2014	PER CHECKLIST COMMENTS
9/17/2014	PER TOWN COMMENTS
2/23/2014	PER TOWN COMMENTS
04/17/2015	PER TOWN COMMENTS
08/28/2015	PER TOWN COMMENTS
12/23/2015	PER TOWN COMMENTS
03/07/2016	PER TOWN COMMENTS
04/29/2016	TC SUBMISSION
07/01/2016	TC SUBMISSION
07/07/2016	TC SUBMISSION
DATE	DESCRIPTION

BBR DESIGN	CIM DRAWN	CMM CHKD
SCALE	H: 1"=100' V:	
JOB No.	2616-06-001	
DATE	DEC. 23, 2013	
FILE No.	2616-D-ZP-001	
SHEET	25 OF 37	

Cad file name: \\alyde\View_projects\002616 - leesburg crossroads rezoning\Planning\Rezoning\Sheet2616-D-CP-002-00-OPEN SPACE.dwg

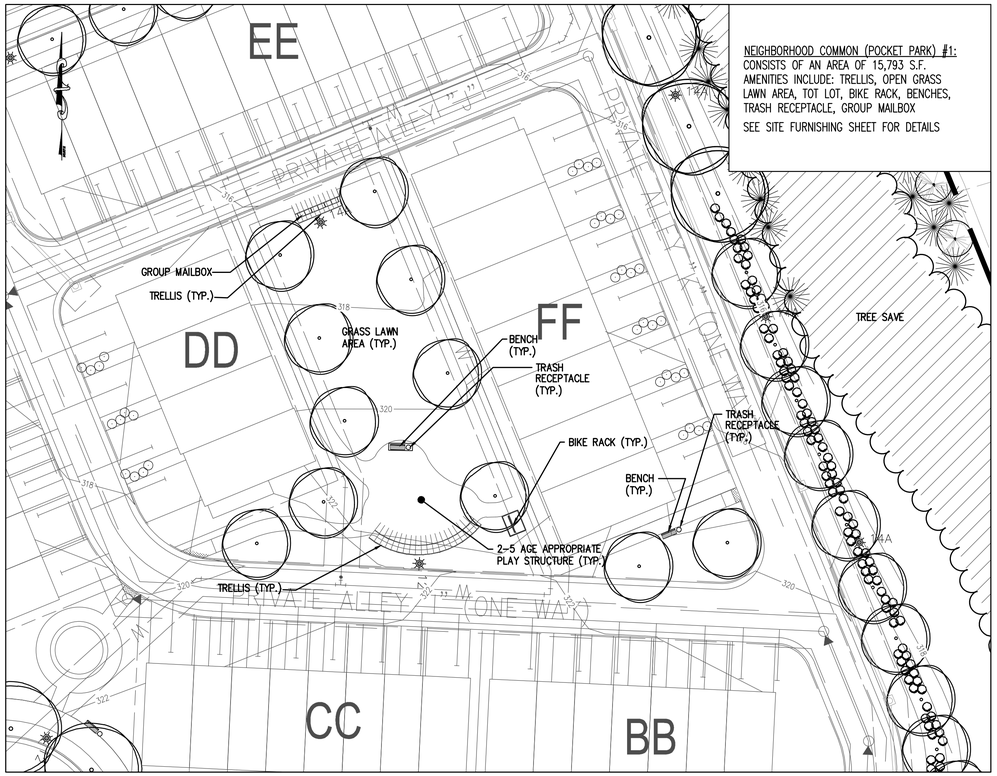

(1) NEIGHBORHOOD COMMON (POCKET PARK)

SCALE: 1"=30'

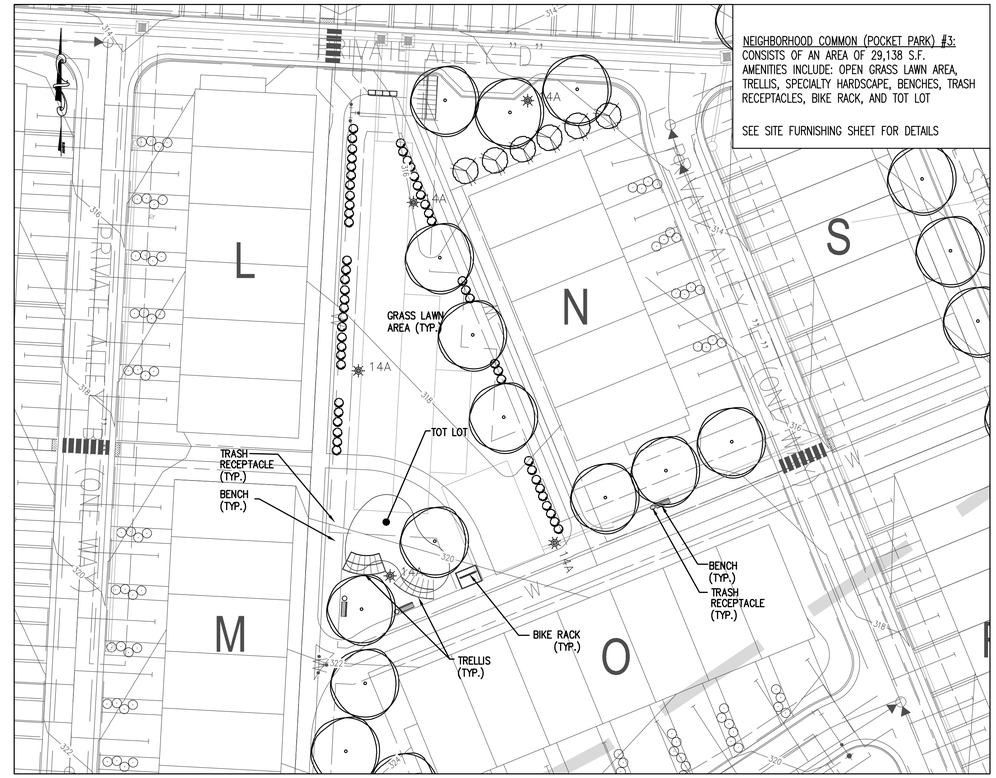

(3) NEIGHBORHOOD COMMON (POCKET PARK)

SCALE: 1"=30'

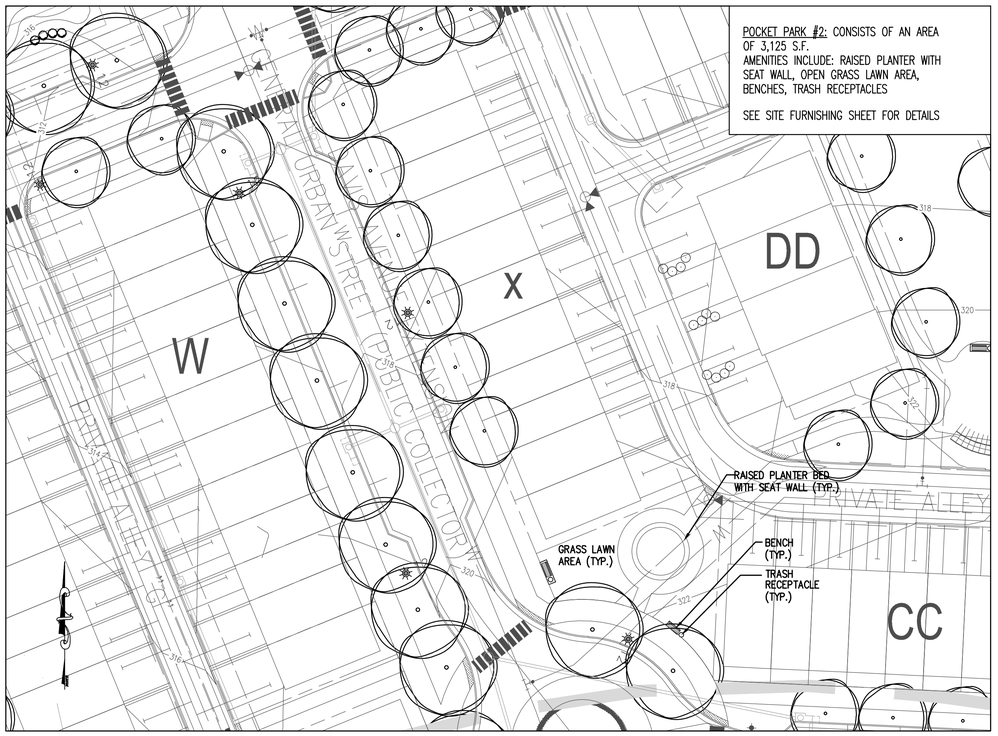

(2) POCKET PARK

SCALE: 1"=30'

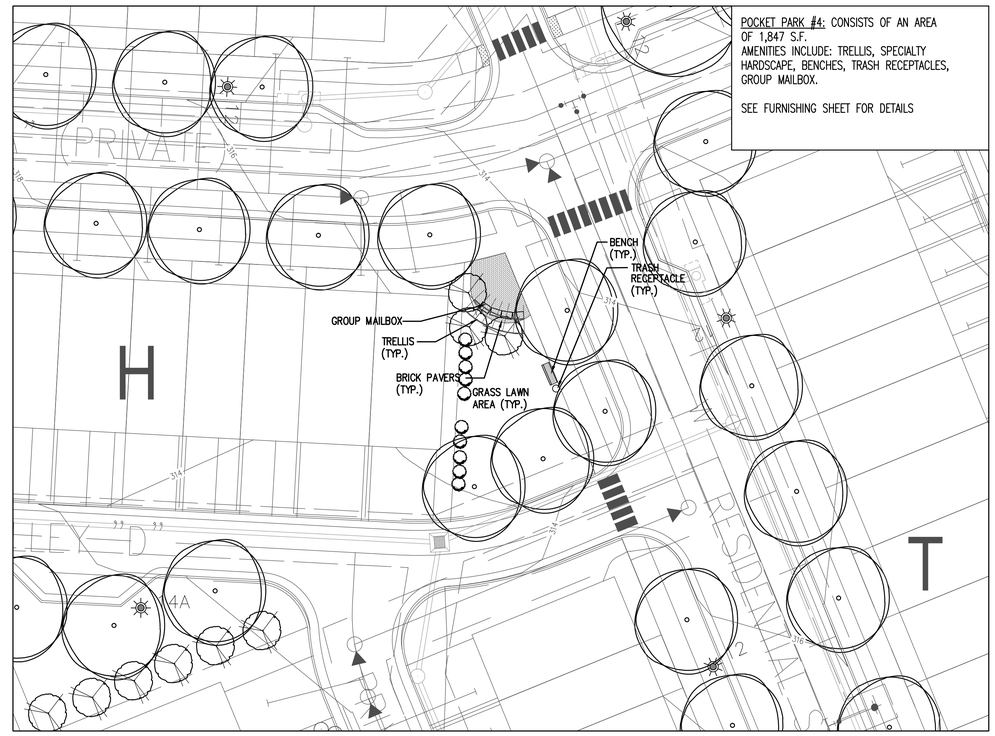

(4) POCKET PARK

SCALE: 1"=30'

Bowman CONSULTING

Bowman Consulting Group, Ltd.
101 South Street, S. E.
Leesburg, Virginia 20175
Phone: (703) 443-2400
Fax: (703) 443-2425
www.bowmanconsulting.com
© Bowman Consulting Group, Ltd.

DETAILED OPEN SPACE PLAN (1 OF 5)

CRESCENT PARKE

ZONING MAP AMENDMENT

TOWN OF LEESBURG

LOUDOUN COUNTY, VIRGINIA

PLAN STATUS	
2/11/2014	PER CHECKLIST COMMENTS
9/17/2014	PER TOWN COMMENTS
12/23/2014	PER TOWN COMMENTS
04/17/2015	PER TOWN COMMENTS
08/28/2015	PER TOWN COMMENTS
12/23/2015	PER TOWN COMMENTS
03/07/2016	PER TOWN COMMENTS
04/29/2016	TC SUBMISSION
07/01/2016	TC SUBMISSION
07/07/2016	TC SUBMISSION
DATE	DESCRIPTION

BBR	CIM	CMM
DESIGN	DRAWN	CHKD

SCALE H: AS NOTED V:

JOB No. 2616-06-001

DATE DEC. 23, 2013

FILE No. 2616-D-ZP-001

SHEET 26 OF 37

Cad file name: \\civil\new_projects\002616 - leesburg crossroads rezoning\Planning\Rezoning\Sheet\2616-D-ZP-002-00-DETAIL LSC.dwg